InnoVfoam B.V.

InnovDos Foam Proportioning System

InnoVfoam B.V.
Lorrie 9
1724 BL Oudkarspel

T. +31 (0)88 9112 112
F. +31 (0)88 9112 119

www.innovfoam.com
info@innovfoam.com

InnoVfoam B.V.

InnovDos Foam Proportioning System

1. GENERAL INFORMATION

SYSTEM COMPOSITION

The InnovDos system is made up of two main components (see flow schedule on page 4) that can be integrated into the system separately:

- A VdS approved Wide Range Balanced Pressure Proportioning device, type MBWP-6, to be installed into the main pipeline of the sprinkler system.
- A VdS approved (gear wheel) foam pump, water turbine driven by pressurized water from the main pipeline and a VdS approved actuating valve, fully assembled with other components. Test valves and gauges are installed between the proportioning device and the pump as secondary components.

PROPORTIONING RATE

The InnovDos system is available in various versions:

- Suited for 1% foam proportioning for the full range from 100 to 9000 lpm (AP-7)
- Suited for 3% foam proportioning for the full range from 100 to 9000 lpm (AP-9)
- Suited for modular extension to 54.000 lpm (HD-5)

FOAM CONCENTRATE TYPES

All the following foam concentrate types are suitable for proportioning in the InnovDos system:
P, FP, FFFP, AFFF, ARC, and detergents for sprinkler systems. Because the system works with a gear wheel pump, the viscosity of the foam concentrate is not a limiting factor.

RELIABILITY

In the InnovDos system, a water turbine driven by water from the main water pipeline drives a gear wheel pump that activates the system. Variations in foam concentration in the balanced pressure proportioning device, installed in the main pipeline, are kept in balance by a device that automatically adjusts the speed of the foam pump and the water turbine without causing additional pressure loss. This guarantees that neither the InnovDos system nor the pipes are subjected to potential damage, not even in case of water hammer or some contamination in the main pipes.

FLEXIBILITY

Due to the effective combination of foam pump and proportioning device and in view of the fact that the components can be delivered separately, the system is flexible in its installation. If the compact proportioning device is installed high in the sprinkler main pipeline, the foam pump can be installed in a separate location, preferably near the foam concentrate tank.
A DN50 line or a DN80 line connect these two components.

PRESSURE LOSS VERSUS WATER CONSUMPTION

Due to the integration of the balanced pressure proportioning device into the system, the pressure loss in the main pipeline of the foam proportioning system is relatively low, especially when compared to a system with a water motor mounted in the main sprinkler pipeline. Since the turbine is driven by water from the water main pipeline, the water exiting from the turbine is not under pressure and can be disposed off into a clear water basement, or into a tank, or into the sewer. This is to be considered when determining the volume of water required.

MATERIAL

The foam proportioning device and the pump are made of bronze/stainless steel and therefore not sensible against contact with any foam concentrate for an extended period of time. The foam concentrate pump does not need to be rinsed but can stay filled. The pump does not have any pistons and cylinders requiring lubrication, so the foam concentrate will not be subject to possible contamination.

MAINTENANCE

The InnovDos system is made of maintenance free components; the entire system is extremely reliable. A standard test according to the instructions is all that is required.

FUNCTIONAL TEST

The InnovDos system can be tested during commissioning by measuring the proportioning rate according to the regulations of VdS CEA-4001 at a low flow rate (500 lpm).
A reference measurement with water as medium can be made at minimum and maximum flow by connecting a three-way valve to the suction side of the foam concentrate pump (see drawing). This way the consumption of foam concentrate during standard tests is minimised.
On page 5 you will find all different test possibilities.

ORDER INFORMATION

When ordering, the information below is required:

- System capacity and pressure at maximum system capacity
- Proportioning ratio (1% or 3%)
- Foam concentrate type

InnoVfoam B.V.

InnovDos Foam Proportioning System

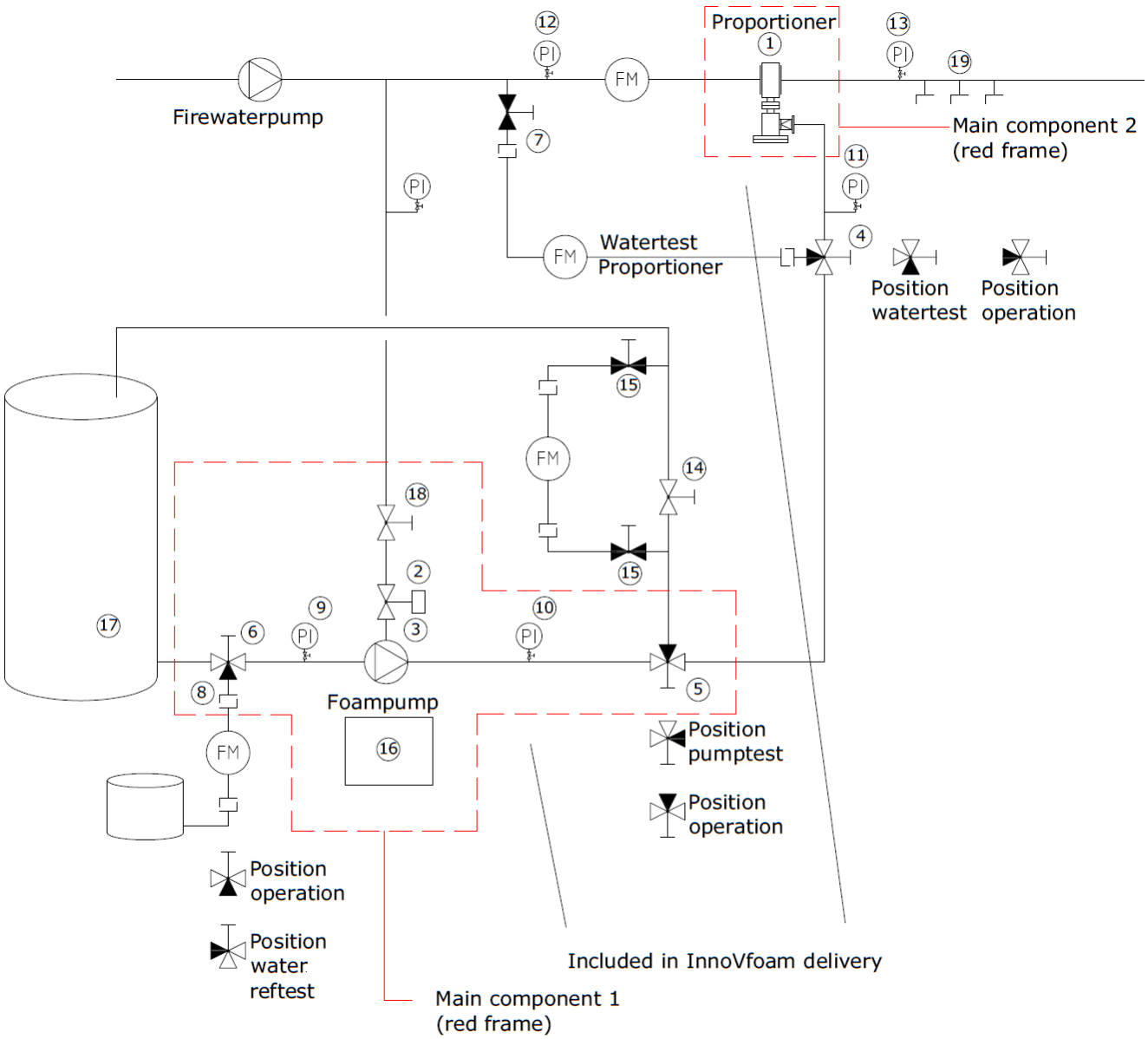

InnoVfoam B.V.

InnovDos Foam Proportioning System

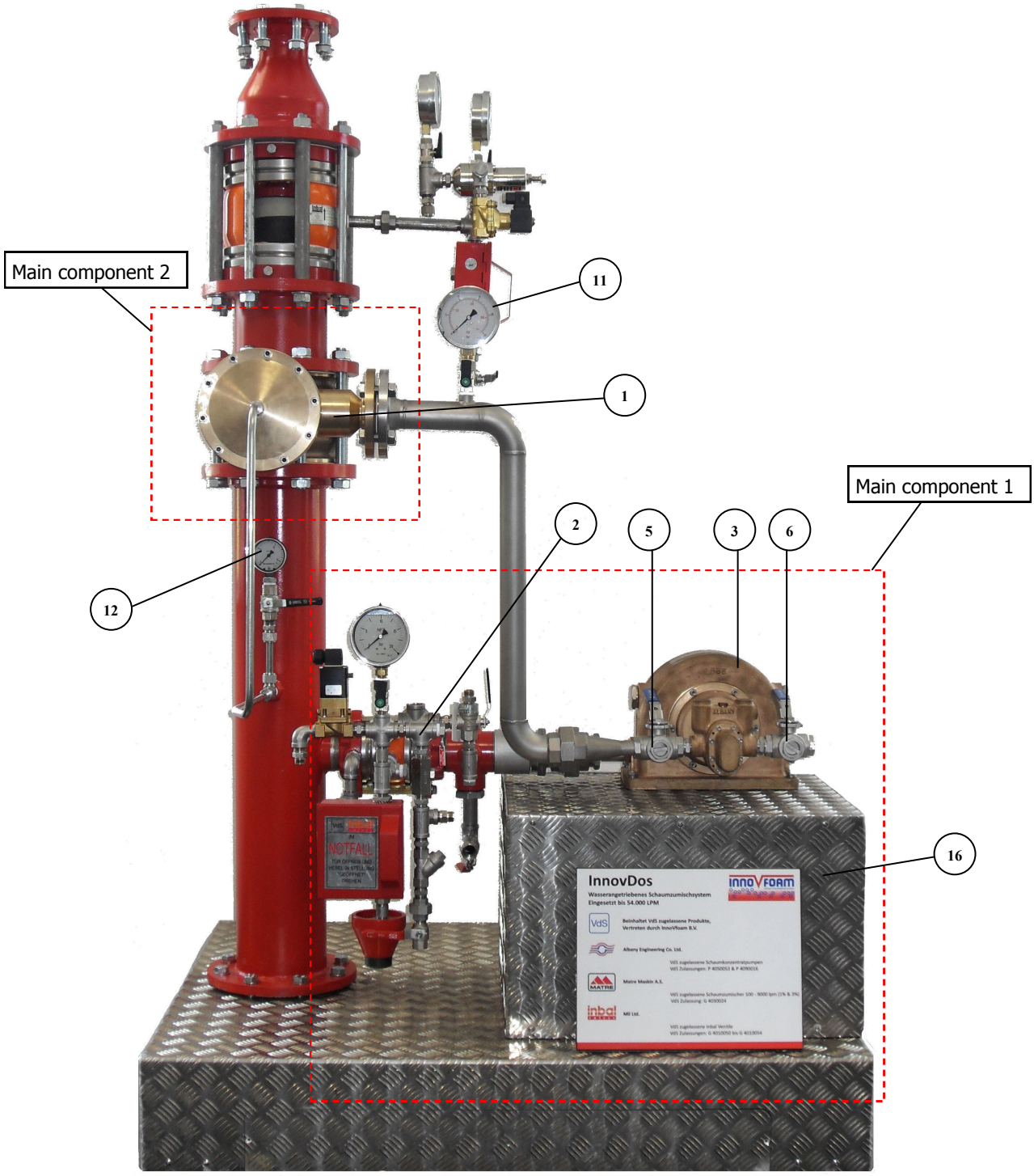

InnoVfoam B.V.
Lorrie 9
1724 BL Oudkarspel

T. +31 (0)88 9112 112
F. +31 (0)88 9112 119

www.innovfoam.com
info@innovfoam.com

2. TESTING (SEE DRAWING ON PAGE 4)

1. System (foam)

The whole system can be tested with foam concentrate using a refracto measurement to determine the proportioning rate. For this test samples are taken at various flows within the range of the proportioner at the test connections (19) which are to be located downstream of the proportioners.

2. System (water)

A reference test can be held with water using the three-way valve (6) at the suction side of the foam concentrate pump to retrieve water from a drum. A flow meter can be used to show the reference value of the proportioning with water. This test can be repeated on a regular basis if required.

3. Foam concentrate pump (foam)

Testing of the capacity and the pressure of the foam concentrate pump can be done by returning foam concentrate back to the foam concentrate tank and by measuring this flow with either a built in or a mobile flowmeter. Furthermore the discharge pressure can be checked on the manometer (10). Three-way valve (5) enables this.

4. Proportioner (water)

Testing of just the balanced pressure proportioner can be done with water by supplying water through a hose connection (7) at the upstream side of the proportioner to the foam concentrate side of the proportioner. A three-way valve (4) at the foam concentrate side can be installed for this function.

PARTS

1. Balanced Pressure Proportioner
2. Actuating valve foam concentrate pump
3. Foam concentrate pump with water driven turbine
4. Three-way valve for watertesting of balanced pressure proportioner (test 4)
5. Three-way valve T-calibre discharge side, size equal to discharge outlet-pump (test 3)
6. Three-way valve T-calibre suction side, size 1 step larger than suction inlet due to possible whirl during system test with water (test 2)
7. Hose coupling water test of balanced pressure proportioner
8. Hose coupling suction inlet for system test with water
9. Suction manometer with valve (-1/3 bar), filled with glycerin, between foam concentrate tank and foam concentrate pump

10. Pressure manometer with valve (0/25 bar), filled with glycerin, in return pipe to foam concentrate tank
11. Pressure manometer with valve (0/25 bar), filled with glycerin, in foam concentrate pipe to balanced pressure proportioner
12. Pressure manometer with valve (0/16 bar), filled with glycerin, in main pipe at upstreamside proportioner
13. Pressure manometer with valve (0/16 bar), filled with glycerin, in main pipe a downstream side proportioner
14. Ball valve in return pipe to foam concentrate tank
15. 2 x ball valves with hose connection for capacity tests foam concentrate pump
16. Turbine water collector content at least 200 ltr, beneath water turbine
17. Foam concentrate tank
18. Manually operated ball valve
19. Test connections

3. TECHNICAL DATA

Proportioning device type:	MBWP-6 (Matre Maskin)
Approval:	VdS (G4030024)
Range:	100-9.000 lpm
Working pressure:	20 bar
Test pressure:	30 bar
Foam proportioning rate:	1% or 3%
Suitable for:	P, FP, FFFP, AFFF, ARC,
	Detergent
Nominal width:	150 mm
Mounting:	Between flanges type DN150/PN16 or 6”/150#
Foam inlet:	DN40/PN16 flange
Installing length:	160 mm
Material:	Bronze BS 1400 LG2 = NS16530 / DS5204 / SS 5204 /
	DIN 1705 G-CuSn5ZnPb
Including:	Integrated return valve (foam inlet)
Shock and pressure sensitivity:	not sensitive (tested by VdS for 3000 cycles)
Working temperature:	1-50 °C
Weight:	Approx. 50 kg

InnoVfoam B.V.

InnovDos Foam Proportioning System

Foam pump type:	AP-7 WTO (Albany)
Approval:	VdS (P4050053)
Maximum discharge volume:	90 lpm
Maximum discharge pressure:	16 bar (for PN16 system)
Maximum water pressure:	14 bar (for PN16 system)
Maximum water consumption:	Approx. 370 lpm@10 bar (depending on the outlet pressure)
Used water drain:	Back to the water cellar (depending on the project)
Number of revolutions:	1600 rpm (depending on the amount of throughput)
Connections pump:	1” BSP female
Connections water turbine:	2” BSP male
Suction height:	Positive
Compatible with:	P, FP, FFFP, AFFF, ARC, detergent
Installation:	On top of collector or water container
Material:	Bronze / Stainless steel
Shock and pressure sensitivity:	Not sensitive
Working temperature:	Ambient
Weight:	Approx. 80 kg

Foam pump type:	AP-9 WTO (Albany)
Approval:	VdS (P4050053)
Maximum discharge volume:	260 lpm
Maximum discharge pressure:	16 bar (for PN16 system)
Maximum water pressure:	14 bar (for PN16 system)
Maximum water consumption:	Approx. 800 lpm@10 bar (depending on the outlet pressure)
Used water drain:	Back to the water cellar (depending on the project)
Number of revolutions:	1600 rpm (depending on the amount of throughput)
Connections pump:	1,5” BSP female
Connections water turbine:	2“ BSP male
Suction height:	Positive
Compatible with:	P, FP, FFFP, AFFF, ARC, detergent
Installation:	On top of collector or water container
Material:	Bronze / Stainless steel
Included:	Automatic overload fuse
Shock and pressure sensitivity:	Not sensitive
Working temperature:	Ambient
Weight:	Approx. 80 kg

InnoVfoam B.V.

InnovDos Foam Proportioning System

Foam pump type:	HD-5 (Albany)
Approval:	VdS (P4090016)
Maximum discharge volume:	620 l/min @ 10 Bar @ 1500 rpm
Maximum discharge pressure:	20 bar
Maximum water pressure:	18 bar
Maximum water consumption:	Approx. typical 1600 l/min @ 10 bar (depending on the nozzle size)
Used water drain:	Open discharge from the bottom of the pelton wheel housing
Number of revolutions:	1500 rpm
Connections pump:	Pump branches flanged 3” ASA
Connections water turbine:	Water connection flanged 4” ASA
Suction height:	Positive
Compatible with:	P, FP, FFFP, AFFF, ARC, detergent
Installation:	On top of collector or water container
Material:	Gunmetal casings, stainless steel shafts with hard chrome plating in seal and bearing areas and phos.
Included:	Automatic overload fuse
Shock and pressure sensitivity:	Not sensitive
Working temperature:	Ambient
Weight:	148 kg for complete pelton wheel unit

Actuating valve type:	Electric Hydraulic Operated Valve (Inbal)
Type	711DX-03C02-FT
Approval:	VdS (G4030024)
Working pressure:	16 bar
Test pressure:	24 bar
Nominal width:	65 mm
Mounting:	Threaded
Inlet:	$2^1/_2$”BSP
Outlet:	$2^1/_2$”BSP
Material:	Cast modular Iron
Working temperature:	1-65 °C
Weight:	Approx. 15 kg

4. WATER CONSUMPTION OF THE TURBINE

Type pump	Main flow (lpm) @10 bar	1% admixture (lpm) @12 bar	3% admixture (lpm) @12 bar	Water consumption turbine (lpm)
AP7 WTO	6000	60		283
AP9 WTO	6000		180	717
AP7 WTO	8000	80		300
AP9 WTO	8000		240	867
AP7 WTO	10.000	100		350
HD5 WTO	10.000		300	1600
AP9 WTO	20.000	200		750
HD5 WTO	20.000		600	2333

5. PRESSURE LOSS GRAPH

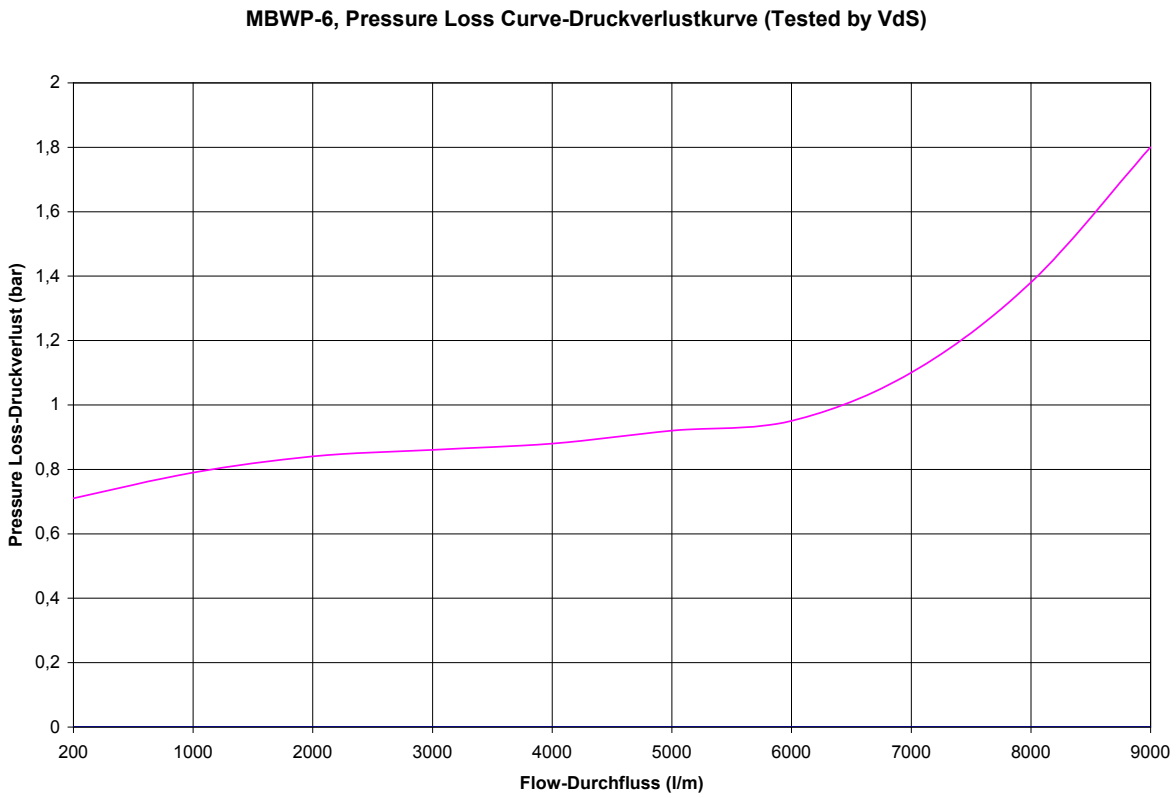

InnoVfoam B.V.

InnovDos Foam Proportioning System

Compact configuration InnovDos proportioning system/foam concentrate container in reception tub.

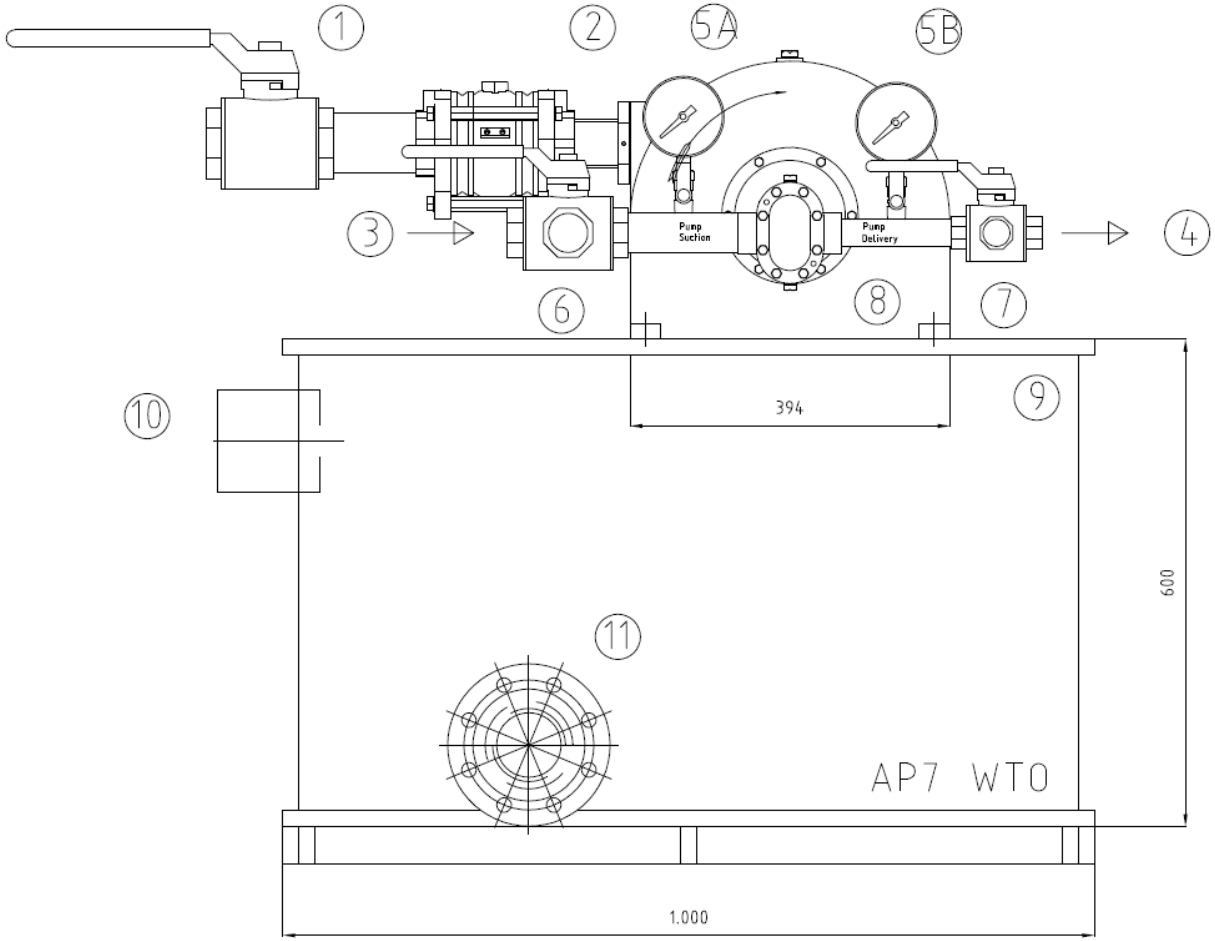

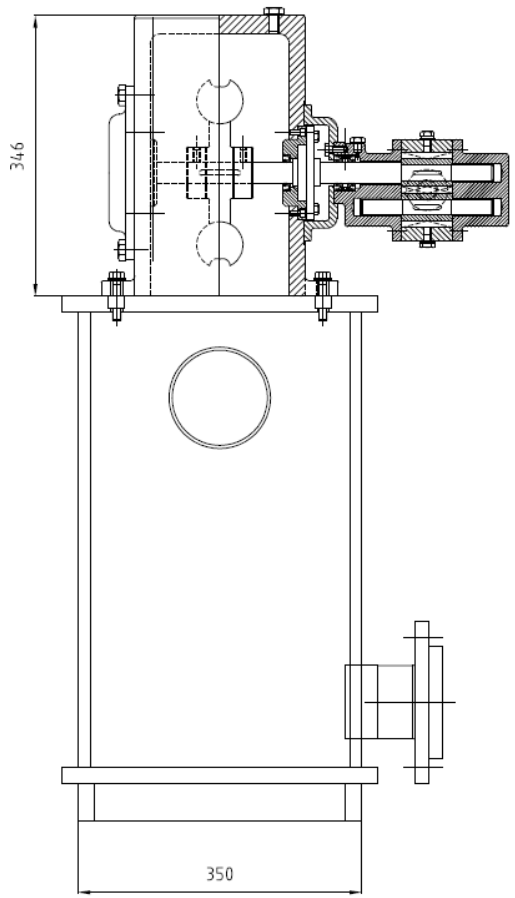

No.	Qty.	Description
11	1	Drainage connection
10	1	Overflow
9	1	Water collection tank
8	1	Water turbine driven foam pump, VdS approved
7	1	3-Way ball valve with pumptest connection 1" BSPF
6	1	3-Way ball valve with watertest connection 1.1/2" BSPF
5A/B	2	Suctiongauge -1/3 bar / Pressuregauge 0/25 bar
4	1	Discharge outlet
3	1	Suction Inlet
2	1	Electric actuated Inbal valve, VdS approved 2.1/2" BSPF
1	1	Ball valve 2.1/2" BSPF

INNOVFOAM B.V.

InnovDos Construction drawing AP7 WTO
Maincomponent 1

FORMAT	DATE	CHECKED	SCALE	DRAWING NR.	SHEET	REV.
A3	270411	JK	1 : 1		1 OF 1	1
SIZE UNIT mm	DRAWN SB			ORDER NR.		

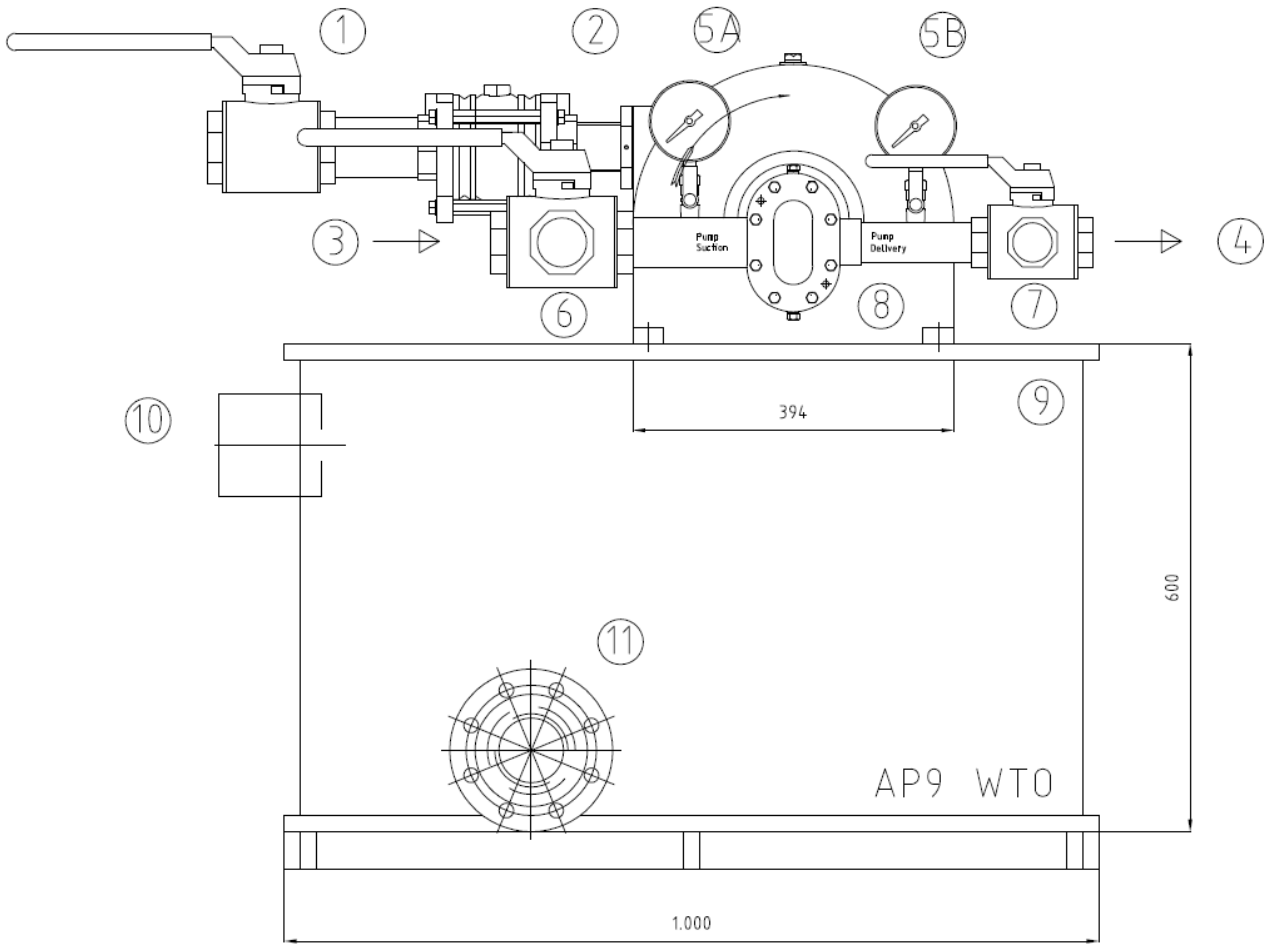

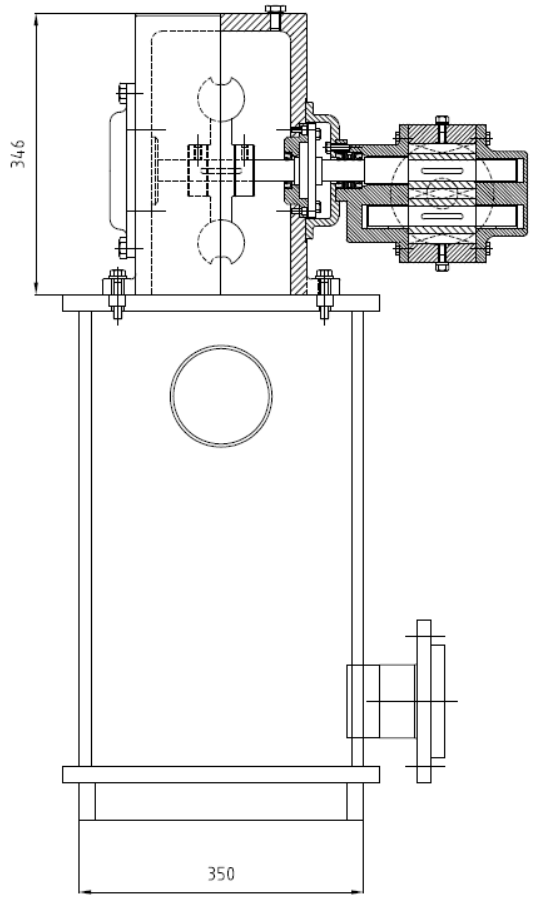

No.	Qty.	Description
11	1	Drainage connection
10	1	Overflow
9	1	Water collection tank
8	1	Water turbine driven foam pump, VdS approved
7	1	3-Way ball valve with pumptest connection 1.1/2" BSPF
6	1	3-Way ball valve with watertest connection 2" BSPF
5A/B	2	Suctiongauge -1/3 bar / Pressuregauge 0/25 bar
4	1	Discharge outlet
3	1	Suction Inlet
2	1	Electric actuated Inbal valve, VdS approved 2.1/2" BSPF
1	1	Ball valve 2.1/2" BSPF

INNOVFOAM B.V.

InnovDos Construction drawing AP9 WTO
Maincomponent 1

FORMAT	DATE	CHECKED	SCALE	DRAWING NR.	SHEET	REV.
A3 SIZE UNIT mm	270411 DRAWN SB	JK	1 : 1	ORDER NR.	1 OF 1	1